NERA
ECONOMIC CONSULTING

Unbundled Access to the Fibre-to-the-Home Networks of Reggefiber

Public version – Prepared for the Netherlands Authority for Consumers and Markets

May 2014

Project Team

Dr Richard Hern
Arjun Dasgupta
Howard Cobb
Nigel Attenborough

NERA Economic Consulting
15 Stratford Place
London W1C 1BE
United Kingdom
Tel: 44 20 7659 8500 Fax: 44 20 7659 8501
www.nera.com

Report Qualifications/Assumptions & Limiting Conditions

This report sets forth the information required by the terms of NERA's engagement by Netherlands Authority for Consumers and Markets and is prepared in the form expressly required thereby. This report is intended to be read and used as a whole and not in parts. Separation or alteration of any section or page from the main body of this report is expressly forbidden and invalidates this report.

Neither all nor any part of the contents of this report, any opinions expressed herein, or the firm with which this report is connected, shall be disseminated to the public through advertising media, public relations, news media, sales media, mail, direct transmittal, or any other public means of communications, without the prior written consent of NERA.

Information furnished by others, upon which portions of this report are based, is believed to be reliable but has not been verified. No warranty is given as to the accuracy of such information. Public information and industry and statistical data, are from sources we deem to be reliable; however, we make no representation as to the accuracy or completeness of such information and have accepted the information without further verification.

The findings contained in this report may contain predictions based on current data and historical trends. Any such predictions are subject to inherent risks and uncertainties. In particular, actual results could be impacted by future events which cannot be predicted or controlled, including, without limitation, changes in business strategies, the development of future products and services, changes in market and industry conditions, the outcome of contingencies, changes in management, changes in law or regulations. NERA accepts no responsibility for actual results or future events.

The opinions expressed in this report are valid only for the purpose stated herein and as of the date of this report. No obligation is assumed to revise this report to reflect changes, events or conditions, which occur subsequent to the date hereof.

All decisions in connection with the implementation or use of advice or recommendations contained in this report are the sole responsibility of the Netherlands Authority for Consumers and Markets. This report does not represent investment advice nor does it provide an opinion regarding the fairness of any transaction to any and all parties.

This report is for the exclusive use of the Netherlands Authority for Consumers and Markets. There are no third party beneficiaries with respect to this report, and NERA does not accept any liability to any third party. In particular, NERA shall not have any liability to any third party in respect of the contents of this report or any actions taken or decisions made as a consequence of the results, advice or recommendations set forth herein.

Contents

List of Tables

List of Figures

Executive Summary

NERA has been asked by the Netherlands Authority for Consumers and Markets (ACM) to estimate the rollout on unbundled fibre by alternative operators up until the year 2017. This is part of the ACM's review of the market for unbundled access over FttH. In order to understand this, ACM poses the following main question:[1]

> *"What is potential maximum roll-out (number of homes passed) by alternative telecom providers on unbundled fiber access up until the year 2017? And to what degree do the main (technical, regulatory and/or commercial) parameters of the business case influence this roll-out (a sensitivity analysis)?"*

In addition, the ACM asks two supplementary questions: (1) What is the effect of WBA on rollout? (2) Is there a business case for two alternative entrants?

NERA has estimated the likely rollout over unbundled fibre using a business case model that estimates the cash flows that an entrant may expect to achieve. **[confidential:** XXXXX**]** we have used a 'bottom-up' principle to calculate the assets that an entrant must employ to supply a service over the Reggefiber network and the revenues that it may earn. Under this approach, we have modeled incremental costs, which represent any additional costs that an entrant would incur over and above what it has incurred in providing other services.

We calculate an increase in the number of homes passed by an entrant, assuming two entrants enter, from 1.6m homes at the end of 2014 to 2.4m homes at the end of 2017. The second entrant, which we assume to be a budget operator, is likely to increase its rollout from 0.7m homes passed at the end of 2014 to 1.3m homes passed at the end of 2017. The results suggest that there is a business case for entry through unbundled fibre and the business case is relatively strong under a set of conditions that we define as our base case. We note that our rollout estimates represent a decision to enter in a year, when in reality there may be significant time lags being the decision being made and implementation. Therefore, our rollout estimates may be a lead indicator for future rollout by an entrant.

The positive business case and rollout remains under various risk scenarios. Although a higher churn rate, higher Reggefiber line charge and slow Reggefiber rollout all have a negative impact on rollout, they are not sufficient to make the business case entirely negative. Even if such risks materialise within reasonable bounds, the business case is unlikely to turn negative at most Area-PoPs.

Our analysis suggests that rollout over the Reggefiber network through WBA over fibre is likely to be limited. For a budget entrant in particular, the cost structure is too high compared to unbundled fibre to be an attractive option and therefore an entrant is likely to prefer entry through unbundling. A premium service provider is more likely to have a positive business case over WBA, but given that stakeholders have suggested that WBA suffers from other non-price problems such as service delivery issues and lack of product differentiation, we consider entry via unbundled fibre more likely for a premium service provider.

---

[1] ACM (November 2013) "Request for tender – For 'Research project FttH 2014'", p4.

1. Introduction

NERA has been asked by the Netherlands Authority for Consumers and Markets (ACM) to estimate the rollout on unbundled fibre by alternative operators up until the year 2017. This is part of the ACM's review of the market for unbundled access over FttH. In order to understand this, ACM poses the following main question:[2]

> *"What is potential maximum roll-out (number of homes passed) by alternative telecom providers on unbundled fiber access up until the year 2017? And to what degree do the main (technical, regulatory and/or commercial) parameters of the business case influence this roll-out (a sensitivity analysis)?"*

In addition, the ACM asks two supplementary questions: (1) What is the effect of WBA on rollout? (2) Is there a business case for two alternative entrants?

We have estimated the likely rollout over unbundled fibre using a business case model that estimates the cash flows that an entrant may expect to achieve. **[confidential:** XXXXX**]**

In this report, we describe our modeling methodology and the results for expected rollout under various market and demographic assumptions. The report is structured as follows:

- Section 2 describes our overall modeling methodology;
- Section 3 outlines our FttH network rollout assumptions;
- Section 4 assesses the market demand for broadband over FttH;
- Section 5 describes our methodology for dimensioning the assets required for an operator to provide a service and the associated costs;
- Section 6 outlines our results under base case modeling assumptions; and
- Section 7 shows our results under various alternative scenarios.

[2] ACM (November 2013) "Request for tender – For 'Research project FttH 2014'", p4.

2. Modelling Approach

In order to estimate the rollout by alternate operators over unbundled fibre, we have developed a business case model to determine the commercial viability of entry from an entrant's perspective. An entrant is likely to determine the expected cash flows earned from providing a service by gaining access to the Reggefiber network and we adopt the same approach to estimate the likelihood of entry.

2.1. What is the Relevant Alternate Operator?

We consider the business case for alternate operators. KPN is already present throughout the Reggefiber network area, and we consider the entry by other operators who would then compete with KPN for retail and WBA customers. Following interviews with stakeholders, it is clear that entry using unbundled fibre represents a significant upfront investment and that an operator is more likely to enter if it has already incurred some of the costs by having existing core network presence, which do not need to be incurred again.

We therefore model the likelihood of entry based on the expected costs of an entrant that may already have a core network presence in the Netherlands. We estimate the incremental costs of providing a service using unbundled fibre **[confidential:** XXXXX**]**. **[confidential:** XXXXX**]** we predict the rollout by operators who have a core network presence.

An alternate operator incurs both an access charge, paid to Reggefiber, and other equipment, backhaul and retails costs in order to provide the entire service. **[confidential:** XXXXX**]** we have used a 'bottom-up' approach to calculate the assets that an entrant must employ to supply a service over the Reggefiber network and the revenues that it may earn. This bottom-up approach encompasses both the upfront fixed costs of entry and the following operating costs. Our asset dimensioning process is described in more detail in section 5.1.

[confidential: XXXXX**]** we consider two entrants, one of which is a normal or premium service operator, whilst the other is a 'budget' operator. The two operators differ in terms of the price they charge, the market they capture and some proportion of costs. We consider entrants of these types to estimate the appropriate rollout by a realistic set of potential entrants, who have different market positioning and may compete for different types of customers.

2.2. Access over the Reggefiber FttH Network

Reggefiber was formed in 2005 by Reggeborgh, in order to invest in FttH infrastructure and allow operators to deliver superfast broadband services to homes across the Netherlands. KPN is currently a 51% shareholder, and the purpose of the joint-venture is to invest in FttH through the Reggefiber entity.

As of January 2014, the Reggefiber network covers over 200 municipalities, and is expected to increase its coverage by **[confidential:** XXXXX**]** municipalities in 2014. The network is gradually moving into the more populated areas in the western part of The Netherlands. The network currently passes 1.688m homes, but is expected to increase its coverage by 320,000 additional homes this year. The number of homes passed includes a small percentage of small

and medium sized businesses, located within residential areas, but does not include industry parks.

The Reggefiber network is represented in Figure 2.1 below.

Figure 2.1
Reggefiber FttH Network

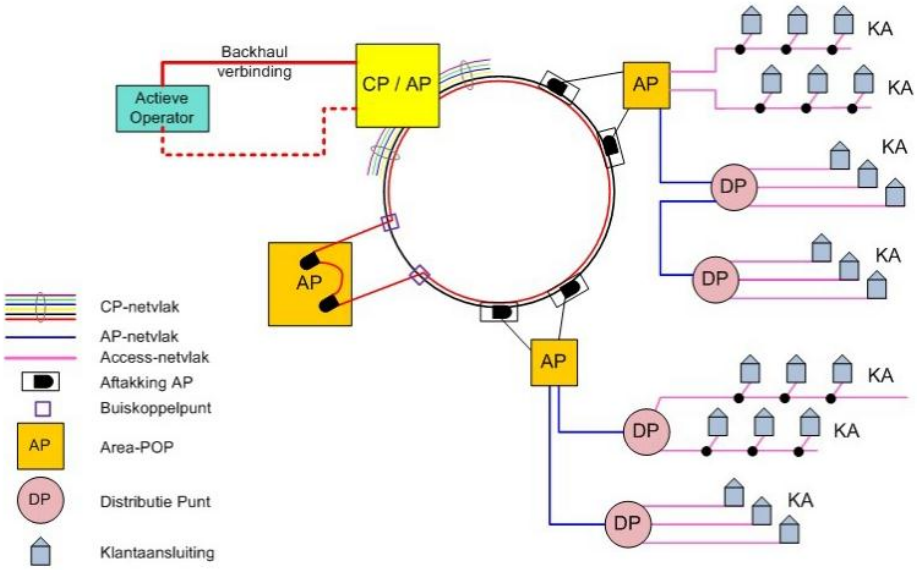

Source: Reggefiber

Figure 2.1 shows the Reggefiber FttH network and the point at which an entrant may enter to provide a service. An entrant incurs costs at both the Area-PoP level and the City-PoP level. Given a portion of these costs are variable based on the number of customers that are eventually served, we model the entrant's cash flows at the Area-PoP level. This enables us to estimate the actual costs incurred per Area-PoP and thereby estimate entry at a local level.

We assess the business case decision at a City-PoP level. From our discussions with stakeholders, we understand that operators may choose to maximise scale as quickly as is economically viable. This would enable an entrant to benefit from economies of scale as a result of large fixed costs, and also combine its broadband services with other services for which it may have a more extensive rollout, such as in mobile. Therefore, we model the business case at the City-PoP level and determine that entry is viable if, when all the Area-PoPs under a certain City-PoP are considered together, there is a positive business case.

2.3. Business Case Entry Decision

Our model is a 25-year cash flow model that estimates the expected revenues and costs that an entrant would expect to achieve. By estimating the cash flows at the Area-PoP level, we then calculate the internal rate of return (IRR) for that Area-PoP. The IRR is defined as the discount rate that makes the net present value of future cash flows equal to zero. If the IRR is greater than the cost of capital, we determine that the Area-PoP is value-adding to the

entrant's business case. If the combined total of the cash flows at all the Area-PoPs under a City-PoP result in an IRR exceeding the cost of capital, we consider that an entrant will roll out its services to all the homes served by that City-PoP.

We note that this methodology may not result in the economically profit-maximising rollout. An entrant will maximise profits if it chooses, instead, not to enter those Area-PoPs that individually do not result in an IRR exceeding cost of capital, even if the City-PoP as a whole does. A modeling methodology that only results in value-adding Area-PoPs results in the most sustainable and economically efficient level of entry. If an entrant chooses to enter an Area-PoP that has IRR lower than cost of capital (i.e., Area-PoPs that do not add value), then it may later, in different, perhaps more difficult, circumstances, choose to exit the homes served by that Area-PoP, in which case the initial entry decision would not have been efficient and sustainable.

Nevertheless we model the business case from a City-PoP entry decision as our base case. Even if this may not be the most efficient level of entry, operators are likely to be motivated by other factors, such as maximising entry in order to bundle the broadband service with mobile services. We note that 6% of triple-play customers also have a mobile subscription with the same provider, and therefore operators may adopt a quad-play strategy in future.[3] This would then mean that the rollout decision is determined at the City-PoP level in reality. Therefore, we use this methodology as our base case and provide an alternate case where the entry decision is considered at the Area-PoP level.

[3] Source: Telecompaper (1 April 2014): "Over half of Dutch households subscribe to triple-play".

3. Demographic Analysis

Our business case analysis is based on an entrant's decision to enter at each City-PoP. This requires an understanding of the exact number of homes passed in each year at each of Reggefiber's PoPs, including in municipalities that have not been passed yet. We therefore estimate the Reggefiber rollout in both current municipalities and new municipalities in future years using stakeholder information.

3.1. Current Reggefiber Rollout

At the end of 2013, Reggefiber had passed 1.66m homes, including small businesses, in 202 municipalities. A summary of Reggefiber's rollout at the end of 2013 is shown below.

Table 3.1
Reggefiber Rollout at the end of 2013

Category	
Number of homes passed	1,664,306
Number of municipalities	202
Number of City-PoPs	471
Number of Area-PoPs	1,161

Source: Reggefiber; Note: The number of Area-PoPs includes Area-PoPs that have City-PoP functionality associated with them. The number of Area-PoPs without City-PoP functionality is 701.

It is clear from Table 3.1 that Reggefiber has the potential to extend rollout significantly as it currently passes 22% of the homes in the Netherlands. An operator's business case is likely to improve significantly if Reggefiber is able to extend rollout, because it then has the ability to spread large fixed costs over more homes. However, there is a balancing factor in relation to the number of homes at each Area-PoP and the number of Area-PoPs per City-PoP.

An entrant benefits from there being more homes passed per Area-PoP as this allows the fixed costs associated with an Area-PoP to be spread over a large customer base. Reggefiber currently builds new Area-PoPs with a capacity of 2772 homes. However, the historical average is significantly lower at approximately 2318 homes, because of legacy network PoP capacities. As Reggefiber builds new Area-PoPs, the average PoP capacity will increase. Moreover, we understand that Reggefiber will be introducing a new Area-PoP model in Q3 2014, which will have a capacity of 3696 homes.

We note that not all the homes at an Area-PoP may be 'feasible' as some may not be reached due to ground topology, such as canals. Currently, **[confidential:** XXXXX**]**% of homes passed by an entrant are connected (physically cabled to, but not, necessarily, 'active') on average, which means that the full capacity at an Area-PoP may never be reached. We incorporate this factor in our business case model to account for the lower number of homes that an entrant is able to pass in practice.

The ratio of Area-PoPs per City-PoP is also an important determinant of an entrant's business case. If Reggefiber is able connect a higher number Area-PoPs per City-PoP, an entrant is able to spread costs associated with the City-PoP, including backhaul, between more homes.

Therefore, Reggefiber's ability in building more Area-PoPs connected to a City-PoP may be an important factor in the business case decision.

3.2. Future Reggefiber Rollout

Reggefiber expects to pass 320,000 homes in 2014 and between 200,000 and 300,000 new homes from 2015 onwards. This rollout includes homes in existing municipalities as well in new municipalities not yet passed by Reggefiber. In order to estimate the homes passed on an Area-PoP basis, we have estimated future rollout for both existing and new municipalities.

For existing municipalities, we have received information from Reggefiber on the expected future rollout achieved at every existing municipality. Although there is a large amount of uncertainty around this expectation, we have used it as our base case estimate for future rollout at existing municipalities. Reggefiber also does not have a complete knowledge of when this future rollout estimate is likely to be achieved. However, based on the likely range of 200,000-300,000 new homes passed per year, and the rollout in new municipalities described below, we have estimated that the future rollout is likely to be achieved between the years 2028 and 2033. We use Reggefiber's future rollout estimate, and a year of completion in the range of 2028 to 2033, to estimate the rollout at each Area-PoP.

Reggefiber has more certainty on rollout in 2014 to existing municipalities which will require a new Area-PoP. Table 3.2 describes our assumptions on the number of homes passed by Reggefiber in 2014 in existing municipalities that will require a new Area-PoP.

Table 3.2
2014 Rollout to Municipalities that Require a New Area-PoP

	Homes Passed for Projects Planned in 2014	% of Project Planned Projects Completed in 2014	Number of Homes Passed in 2014	Municipalities with 2014 Rollout
Using an Existing City-PoP	81,000	52%	42,120	Apeldoorn, Doetinchem, Eindhoven, Lelystad, Tilburg, Urk, Veenendaal, Zwolle
Requiring a New City-PoP	21,000	74%	15,540	Emmen, Hengelo, Hilversum

Source: Reggefiber

For any Area-PoP that reaches its capacity in terms of number of homes passed, we 'create' a new Area-PoP within that municipality connected to the same City-PoP. Reggefiber follows a similar process and creates additional Area-PoPs when all the capacity at an Area-PoP is filled. Similarly we also create a new City-PoP if our assumption on the number of Area-PoPs per City-PoP is reached.

For rollout to *new* municipalities in 2014, we assume a rollout of 60,800 homes in the nine following new municipalities: Bernheze, Brunssum, Coeverden, Hellendoorn, Gilze en Rijen,

Rheden, Baarn, Hoogeveen and Eersel. This is based on the assumption that 64% of the homes planned for new municipality projects in 2014 will be passed this year.[4]

For rollout to new municipalities beyond 2014, Reggefiber has indicated that at least the following factors affect the decision to rollout to a new municipality:

- KPN strategy for rollout determination;
- Availability of financial means (in order to make the necessary investment);
- Capex level in a municipality per home;
- Existing alternative infrastructure (such as cable or fibre) and local competition situation;

Our model does not assess the probability of Reggefiber rolling out to a new municipality on any of the above reasons. Stakeholders (including Reggefiber) have little understanding about the criteria above at new municipalities, and Reggefiber only determines the importance of each factor for a new municipality when it is considering rollout to it. Therefore, we have modelled rollout in new municipalities based on preference for municipalities with a higher population density. We exclude any of the islands, as Reggefiber does not expect to roll out to these homes.

We also make an assumption on the capacity at new Area-PoPs built by Reggefiber. We understand that Reggefiber will be introducing a new Area-PoP model in Q3 2014, which will have a capacity of 3696 homes. Therefore, we use this as our base case assumption for new Area-PoPs. We also assume that only 87% of the homes in the area will be passed because the remaining proportion may be too challenging to reach, as discussed in section 3.1.

[4] Source: Reggefiber

4. Market Demand for Services Delivered over FttH

Our business case model estimates the expected revenues that an entrant may be able to earn from providing services over unbundled fibre. The expected revenues are calculated as the product of three variables: (1) the FttH penetration rate; (2) the entrant's market share; and (3) the average revenue per user (ARPU).

4.1. FttH Penetration Rate

We define the FttH penetration rate as the proportion of all households within the Reggefiber network area that take up a fixed broadband service over FttH. Households can currently take a broadband service over DSL, cable or FttH in the Reggefiber network area. In the Netherlands overall, cable had a 45.8% share of the market at the end of 2013, and fibre only had a 7.4% share. Although the FttH penetration is higher in the Reggefiber network area at around 33%, cable still holds a substantial share of the market. Therefore, competition from cable operators may prevent the FttH penetration rate from increasing substantially.

Figure 4.1
Netherlands Fibre, Cable and DSL Market Shares

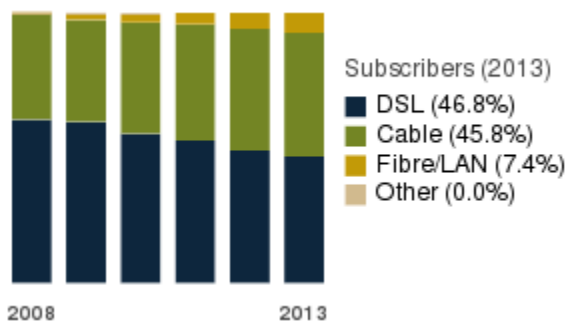

Source: Telegeography

Figure 4.1 shows the trend in the share of subscribers in the Netherlands taking a service over each type of infrastructure. The recent trend in increasing cable market share is noticeable, and suggests that cable has been able to compete on even terms with fibre and may be able to continue to do so. Any increase in the number of customers taking a fixed broadband service over FttH is likely to be limited by competition from cable.

Our interviews with stakeholders have suggested that a long-run FttH penetration rate of 55% may be feasible. Reggefiber believes that a minimum FttH penetration of **[confidential:** XXXXX**]**% must be achieved for it to have a positive business case for network rollout and its long-run target is **[confidential:** XXXXX**]**%. We assume in our base case a long-run FttH penetration rate of 55%. Given the FttH penetration rate is currently, 33% within the Reggefiber network area, we consider that it will take quite some time before the long-run steady state is achieved. Therefore, in our base case we assume that the long-run FttH penetration rate is reached in 2030, 16 years from now. This would imply an increase in the proportion of customers taking a service over FttH of 1.7% per year. Given the uncertainty over this long-run steady state, we test the sensitivity around our results in section 7.

We also consider the experience of other developed economies for the FttH penetration rate. Although many of these countries have different competitive circumstances within the broadband market, we consider that their experiences may offer a useful benchmark against which we can cross-check our assumption.

Figure 4.2
FttH Penetration Rate in Other Countries

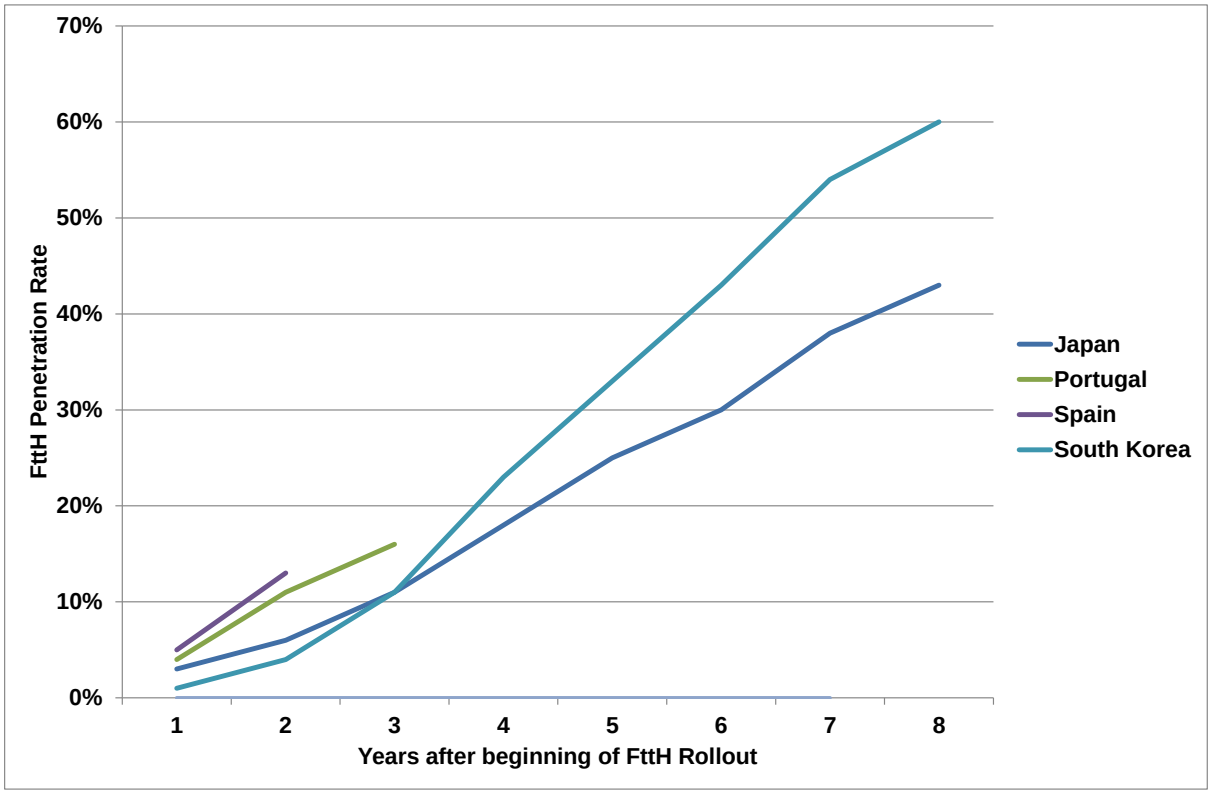

Source: Telegeography

Figure 4.2 shows the FttH penetration rate in a few other countries in the years following the beginning of rollout. In both Japan and South Korea the penetration rate has exceeded 40% just 8 years after the beginning of rollout. Indeed in South Korea, the FttH penetration rate is already in line with the 55% long-run assumption we are using in our base case. However, we note that the market conditions in the Netherlands may be substantially different from the conditions in the countries studied above. Figure 4.3 shows that the Netherlands cable market (green bars) has a much greater share of the market than in other countries. Moreover, the cable market share in the Netherlands has been increasing whereas it has been decreasing or staying flat in other countries. Therefore, the rate of increase in the FttH penetration rate may not be as high as in Singapore or South Korea.

Figure 4.3
Competition from Cable and DSL in Other Countries

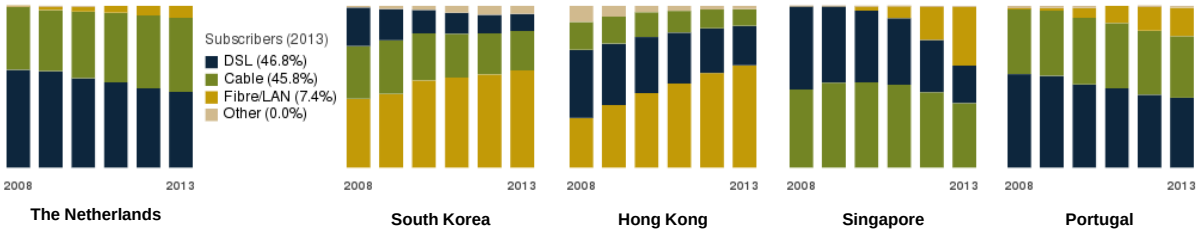

Source: Telegeography

Overall, we consider a long-run FttH penetration of 55% to be the most appropriate assumption as it takes into account the current Reggefiber target penetration, the minimum that Reggefiber expects is needed for it to have a business case and experience from other countries. This represents the proportion of all households who take up a fixed broadband service over FttH. Our base case assumption accounts for the competition from the cable market, which results in slower growth in FttH penetration compared to other countries. As a result, we assume the long-run steady state is achieved in 2030, 16 years from now.

4.2. Entrant Market Share

The entrant's revenues are also dependent on the share of FttH-based customers that it is able to capture. We distinguish between three sources of customers that an entrant may capture:

- Customers new to an FttH-based service in existing municipalities (i.e. moving from cable, DSL or no broadband service);
- Customers churning from other FttH operators in existing municipalities; and
- Customers taking an FttH-based service in new municipalities.

At the beginning of the modelling period, an entrant's market share is limited in existing municipalities by the customers that the incumbent operator already has. KPN has a market presence at all of Reggefiber's locations and therefore an entrant can only capture any customers that churn from KPN or are new to FttH. If the KPN churn rate is low, an entrant cannot capture many customers who are already using services provided over FttH. It can only capture customers new to service over FttH, which limits the over market share of the entrant. Therefore, the churn rate is a critical factor in the ability of an entrant to have a commercially viable business case.

[confidential: XXXXX**]** that the KPN churn rate is currently very low, as their customers display strong brand loyalty. KPN assumes a churn rate of **[confidential:** XXXXX**]**% in its business case, implied by an average customer life of **[confidential:** XXXXX**]** years. **[confidential:** XXXXX**]** This may be a significant barrier to entry. We use **[confidential:** XXXXX**]**% as our base case assumption for the KPN churn rate.

An entrant is likely to have a higher churn rate since it takes time for an operator to build brand loyalty. **[confidential:** XXXXX**]** that an entrant may expect to have a churn rate of between 15% and 20%. This is in line with expectations that an entrant will not be able to

retain customers as successfully as KPN. We therefore use an entrant churn assumption of 15% for our base. **[confidential:** XXXXX**]**

In addition to the market churn rate, we also make an assumption on the market capture rate. For each of the three types of customers described at the beginning of this section, an entrant is able to capture a certain proportion. The proportion is higher for churning customers than it is for customers new to FttH because by definition, a churning customer is one that has left the service provided by another operator. By contrast, a new customer can take a service provided by any of the competitors in the market. The market capture proportion for churning customers is derived in our model from the market capture of customers new to FttH. [5]

An entrant's market capture also depends on its market positioning. **[confidential:** XXXXX**]** a 'budget' entrant considering entry may not be as successful in capturing customers using FttH services for the following reasons:

- A 'budget' entrant **[confidential:** XXXXX**]** does not have any existing customers over FttH. Therefore, its service remains untested and users may require a lot of persuasion to switch;
- A 'budget' operator is less likely to incur high costs on marketing and subscriber acquisition, which results in lower ability to attract new customers;
- Customers new to FttH are likely to be ones who demand higher broadband speeds and premium services, which a 'budget' operator is less able to capture.

Therefore, we assume that the market capture for a 'budget' entrant would be lower than that of a normal or premium service provider. **[confidential:** XXXXX**]** we have assumed a market capture rate of 8% for a normal service provider in 2014, increasing to 20% by 2018. We assume a market capture of 4% for a 'budget' service provider in 2014, increasing to 10% in 2018. The increase in market capture is a result of customers gradually learning about an entrant and the 'word-of-mouth' effect spreading. **[confidential:** XXXXX**]** In other words, we assume that an entrant may, for example, capture 8% of new customers in 2014, 13% in in 2015, until it reaches its target market capture of 20% by 2017. We do not believe that an entrant would be able to capture 20% of new customers from the first year, since customers take time adjust to the presence of a new entrant and learn about its service offerings.

4.3. Average Revenue per User

The final component of the calculation of revenues is the ARPU. We have used a blended ARPU assumption based on the proportion of all customers that take a different bundle of different broadband download speeds. In other words, we estimate a weighted average ARPU based on different weights for each group of customers taking single -play, double-play, triple-play packages at 50Mbps, 100Mbps or 500Mbps download speeds. We use this breakdown in order to predict any ARPU trends from bundling or higher download speeds.

---

[5] The market capture proportion for churning customers is derived in our model using the market capture for new customers. For example, take the case of two new entrants, each with a market capture of 20% of new customers. If a customer churns from KPN, the market capture of these customers churning from KPN is 50% [20% / (20% + 20%)].

[confidential: XXXXX**]**

We note that the ARPU that an entrant may achieve is linked to the FttH penetration rate and the market capture. If an entrant attempts to charge a high discount relative to competitors, competitors may respond with a price decrease in order to prevent the entrant from capturing new customers. In particular, competitors may allow an entrant to charge a small discount relative to them, but if the entrant charges a discount beyond a certain threshold, competitors may respond with price cuts. The price discount will be eroded and the entrant will not be able to capture any higher market share. An entrant is likely to prefer avoiding this strategy as it may not be able to withstand any price war and may become insolvent. An entrant is essentially a price taker.

Therefore, an entrant's ARPU and market share is limited by the competition from cable operators and KPN. We assume that a premium entrant is able to charge a small discount of 10% relative to KPN, excluding its budget brand Telfort. We make a separate discount assumption for a budget operator, which does not directly compete with KPN's 'premium' service. A budget operator is likely to compete with Telfort, which we assume would result in a higher ARPU discount of 40% relative to KPN's premium service.

We also assume a general trend towards bundled products and higher speeds. **[confidential:** XXXXX**]** given that operators charge a higher price for bundled products with higher speeds, this would increase the blended ARPU over time. At the end of 2013, more than half of Dutch households subscribed to a triple-play service.[6] Moreover, this phenomenon is not limited to premium service providers as budget operators have also seen increases in subscriptions of triple-play services. **[confidential:** XXXXX**]**[7] Our assumptions on the proportion of customers who upgrade to a bundled product and higher broadband download speeds are outlined in Appendix A.

In our model, we assume an initial proportion of all customers that take each bundle and each broadband package as described in Table 4.1 below. **[confidential:** XXXXX**]**

Table 4.1
Proportion of Customers who take Each Bundle

	50 Mbps	100 Mbps	500 Mbps
Single-play	**[confidential:** XXX**]**%	**[confidential:** XXX**]**%	**[confidential:** XXX**]**%
Double-play (Call)	**[confidential:** XXX**]**%	**[confidential:** XXX**]**%	**[confidential:** XXX**]**%
Double-play (TV)	**[confidential:** XXX**]**%	**[confidential:** XXX**]**%	**[confidential:** XXX**]**%
Triple-play	**[confidential:** XXX**]**%	**[confidential:** XXX**]**%	**[confidential:** XXX**]**%

Source: **[confidential:** XXXXX**]**

6 **[confidential:** XXXXX]

7 **[confidential:** XXXXX]

Although we assume there is a general trend towards bundled products and higher broadband download speeds which would lead to higher ARPU, we understand that the overall blended ARPU is unlikely to increase over time. Therefore, we have incorporated an 'intrinsic' ARPU price trend in our model. This captures the change in ARPU for any specific service bundle for a specific broadband download speed. In our model base case, we have assumed the intrinsic ARPU for each service bundle decreases by 1% per year **[confidential:** XXXXX**]**. The fall in intrinsic ARPU outweighs the effect of trading up to higher price bundles, which results in a "more for less" result. Therefore, our overall blended ARPU assumption declines slightly over the entire modeling period.

We also assume a separate ARPU for business and wholesale customers. We assume a 10% premium for business customers and a 50% discount for wholesale customers relative to residential customers **[confidential:** XXXXX**]**.

The net effect of the trend towards bundling and the decline in intrinsic ARPU results in the blended ARPU assumption described below.

Figure 4.4
NERA Blended ARPU Assumptions

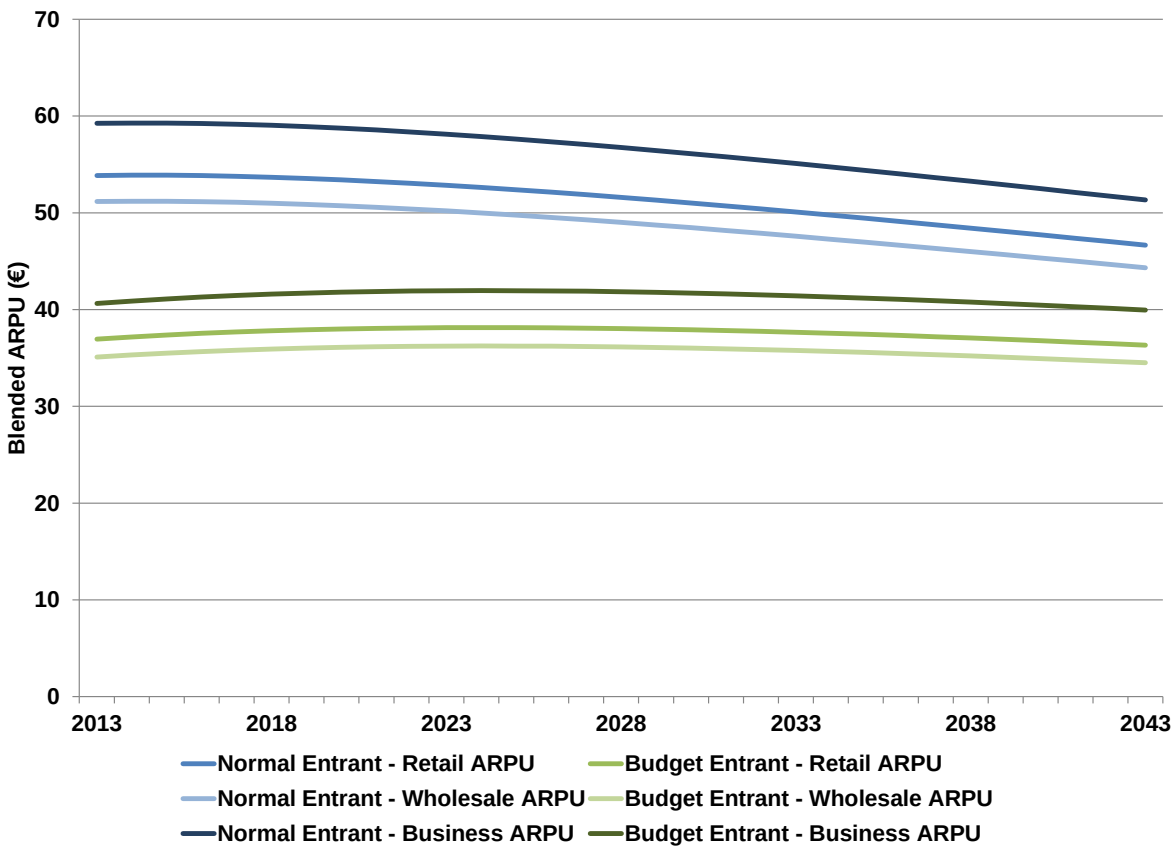

Source: **[confidential:** XXXXX**]**

Figure 4.4 shows that, for both types of operators, the initial trend towards bundled products and higher download speeds results in a higher ARPU. However, after a few years, the intrinsic price trend effect dominates and results in a falling ARPU. This **[confidential:** XXXXX**]** incorporates the limitations of an entrant setting its own price.

Our market modeling suggests that the link between average revenue per user (ARPU) and entrant market capture is also an important determinant of rollout. If an entrant is able to offer a relatively low discount of 10% to KPN, whilst capturing a significant share of churning and new FttH customers,[8] then the business case is strong and rollout increases as predicted under our base case. However, if a 10% discount is insufficient to capture customers, an entrant will make little headway into the market, and rollout over unbundled fibre will not increase as fast as predicted. We note that a 10% discount relative to KPN may be insufficient to encourage existing KPN customers to switch to a new untested provider. Even if it does have an effect, KPN is not a static participant, and is likely to respond with a different pricing or marketing strategy. Therefore, an entrant must have an attractive retail offering, combining 'more for the same price' in order to compete with the incumbent.

[8] We implicitly model a positive level of churn from cable customers by assuming the FttH penetration rate increases. An increase in the FttH penetration rate implies there are new FttH customers who have previously taken a cable or DSL service or no broadband service previously. This would imply there may be at least some positive level of cable customer churn.

5. FttH Asset Dimensioning and Cost Computation

We estimate the costs of entry by estimating the purchased volumes of equipment and services employed in providing the services. A dimensioning method, which is an approach to working out how many of each thing is needed, is used in our model.

5.1. Asset Dimensioning Approach

An entrant incurs costs in entering the market and providing the services. Charges will be levied by vendors for equipment, and by providers of services employed by the entrant. Charges are levied on the basis of whatever specific items contracted by the entrant, each of which is priced by the vendor in units of whatever component items it can separately supply. For equipment these could be chassis, additional capacity components such as port cards (which might provide connection points for FttH fibres, for example) or processing capacity (such as capacity for 64 additional digital TV streams, perhaps). Each item or service employed by an entrant adds to its costs. The items or services employed are referred to, generally, as 'input factors'; they are 'inputs' for the entrant's deliveries of services.

We calculate the cost that an entrant incurs using a 'bottom up' approach. This method calculates the input factors needed for the entrant's scale and then applies the 'prices' charged by the suppliers for each of those items. Added together, the sum represents an estimate of the entrant's total costs incurred to provide those services at that scale.

While the model is already equipped with the prices that we believe entrants will be charged for the equipment and services we think they will need in the Netherlands, the quantities of those items vary with scale, and have to be calculated. Further, the volumes of each item required have to be estimated in the terms, or units, in which they are charged by the supplier; often these do not directly relate to the entrant's service, or to its customers' demand and, instead, some inference has to made from both the entrant's scale and the vendors' units of supply. This is a process of 'dimensioning' the factors employed in the services.

Units of supply for the equipment and services required by entrants, the input factors, are specific to each individual factor. The quantity needed, of any factor, may be related to the numbers of customers; for example, the number of FttH lines needed would be directly related to the numbers of active customers, and not more because the entrant does not need to pay for lines laid to other premises, housing people who are not his customers. The charge for FttH lines, then, is directly related to the number of FttH customers an entrant serves. This is an example of a relative dimensioning method and, in this case, is 1, per Home Activated by the entrant. We predict the costs of all the FttH lines by multiplying the number of lines (which we estimate from the numbers of customers) by the current price of the lines (which we have been provided by Reggefiber).

However, other equipment and services cannot be predicted in this way, because their provisioning is less direct. An example is the Ethernet Switch at the Area PoP. This unit comprises a chassis, supplied at a certain price, and a number of Ethernet Port cards – each of which can provide service for up to 48 customers. The provisioning of the Ethernet Port cards required depends on how many cards, each serving 48 customers, are needed to serve all the customers. The number of cards needed depends on both the number of customers, and the 'capacity' of the port card which, in this case, is 48 customers. This dimensioning method is a

‘capacity’ dimensioning, and takes the form of capacity of 48, Homes Activated. (In this example, the homes activated are only the homes activated at any particular Area PoP so the dimensioning rule has to be further repeated for every PoP, because the numbers of homes activated at each PoP will vary and so might the size of the Ethernet switch at each PoP.)

In addition to the ‘relative’ method, and the ‘capacity’ method, we also need sometimes to use another type of dimensioning method, such as where network elements must always be provided to a minimum level, irrespective of scale. In such cases, dimensioning of the input factor is sometimes constrained by a minimum provision level, often 2, for example, to ensure resilience in the case of a serious fault. An example might be an IPTV server, at the network centre, which, though it might have capacity to serve 150,000 customers, may need to be duplicated to ensure continuity of service. Its dimensioning rule could be thought of as 150,000, Homes Activated; Minimum 2. In addition to a ‘capacity’ dimensioning rule, of a unit for every 150,000 customers, there is a ‘minimum’ dimensioning rule to ensure that at least two units are always provisioned, even where scale might be small and not justify two of them on capacity grounds, alone. On a technical note, the Excel model does allow for multiple dimensioning constraints such as these two; in fact all three types of rule, relative, capacity, and minimum can be employed for any factor, if required.

The dimensioning model uses specific rules for each input factor, similar to the examples shown above, though with dimension values relevant for each factor’s capacity, or relationship, or minimum provision. These are the ‘drivers’ of the provisioned quantities of each factor. All the input cost factors are listed in Appendix B, together with the dimensioning driver employed.

The dimensioning process in the model quantifies the provision of factors at each PoP, or within the Network Core, separately for each year of the period being considered, so that the cost incurred at each PoP, each year, can be calculated. The dimensioning model also computes the provision of factors required in the Network Core, each year.

5.2. Cost Computation

Following the asset dimensioning process described above, we estimate the total costs that an entrant may expect to earn. This is the total cost of the product of assets required for a specific cost item and its price for any given year. For any capital expenditure, our model requires an asset’s cost to be incurred every time an asset requires renewal, i.e. when the asset is fully depreciated. We employ stakeholder data for assumptions on factor costs and asset lives.

We compute costs separately for Area-PoP related costs, City-PoP related costs and network-level costs. This allows us to allocate the City-PoP and network costs between Area-PoPs depending on which are Area-PoPs are likely to be entered. For example, we allocate the City-PoP related costs to all the Area-PoPs under that City-PoP based on the number of homes activated at each Area-PoP. Similarly, for network-level costs, we allocate the total to all the Area-PoPs that are commercially viable based on the number of homes activated at each Area-PoP.

The final costs are then subtracted from revenues for each Area-PoP in each year in order to estimate cash flows. This is the basis for the business case determination.

From the steps described above, we estimate the revenues from market demand and ARPU. In addition, the costs are calculated as described above. By subtracting the costs from revenues at each Area-PoP for each year we estimate the cash flows. The series of cash flows for an Area-PoP are used to estimate the internal rate of return for each Area-PoP over a 25-year time horizon **[confidential:** XXXXX**]**. The internal rate of return is defined as the discount rate that results in a net present value for the project of zero. If the internal rate of return is greater than the cost of capital for an Area-PoP, then the entrant earns economic profit and will decide to enter. Using this process we determine whether entry will occur at all Area-PoPs.

5.3. WBA Costs

We estimate the business case separately if an operator is considering entry via WBA. Under this option, an entrant earns the same revenues, but incurs different WBA costs. As a result, our model computes costs separately for the WBA entry decision. The nature of these costs is described below.

The WBA tariff is not geographically sensitive. The tariff comprises four separate parts:

- A national point of interconnect (a WAP) for the serving operator,
- End-user services anywhere in the Netherlands (comprising two tariff elements, provision of the physical line, and the line transmission service for that end-user),
- National transmission, between the end-user and the point of interconnect for the serving operator, and
- A single WBA implementation charge.

Each of these tariff elements is charged on a specific, different, basis, and can comprise both a setup (or once-incurred) charge, and/or a regularly recurring charge.

The national point of interconnect can be setup in terms of either 1 Gbps capacity or 10 Gbps capacity. The model assumes that interconnects are setup with 10 Gbps capacities; when more than 10 Gbps capacity is required, in total, from all served end-users, another 10 Gbps interconnect is set up. The setup charge is € 4,500 per 10Gbps WAP.

Recurring charges for the national point of interconnect are zero, whether for 1 Gbps or for 10 Gbps; the model calculates no recurring costs for the WAP.

End user services comprise an FttH line serving the end-user's premises, and a transmission service on that line. Setup charges for the FttH line are € 25.00, unless migrated from another FttH operator where the charge is € 51.52. The model calculates both the number of new lines and, of those, the number that have been migrated from other operators, before applying the relevant line setup cost. There are no setup charges for the transmission service on a user's line.

Recurring charges for the end user service are the sum of the recurring charges for the FttH line (€ 19 per month) and the transmission service, for which the model assumes use of the 100 Mbps symmetric service, charged at € 11 per month. There is no additional charge for a second, 'premium' PVC/VLAN on the user's line for VOIP. The total recurring charge in the model is € 30 per month (€ 19 + € 11) per end-user.

National transmission service comprises both setup and recurring charges. Two transmission service instances are included within the WAP tariffs and so those two instances, one for the basic broadband service, and the other for VOIP (necessary because VOIP is intolerant of packet delay or loss and it requires a different, often priced at a premium, class of service in the packet network) are employed in the model without additional setup charges. Consequently, no national transmission setup charges are calculated in the model.

Recurring charges for national transport are calculated in the model. The national transmission tariff is priced in units of 1 Gbps, at € 1,250 per month. The model calculates the cost of sufficient national transmission units to provide for the aggregate peak demand from all the end-users.

Finally, the WBA service implementation is priced at € 11,000, and is payable once only. The model includes this cost when calculating the costs of the WBA service.

6. Model Results

We note that our results for rollout by an alternative entrant represent a *decision* to enter and not necessarily the actual implementation of connecting homes. In practice, there may be a significant time lag between the decision to enter and the actual implementation of strategy. Therefore our rollout estimate may not be achieved for some time following the year for which the estimate is made.

In addition, our model assumes that after Reggefiber builds a new Area-PoP and passes homes connected to it, an entrant makes the decision to enter or not six months later. The model contains this lag between the point in time when Reggefiber rolls out to a set of homes and when the entry makes the entry decision. An entrant may take some time before finalising its entry decision. If Reggefiber builds a new Area-PoP towards the end of a year, an entrant may make its decision in the following year and our model captures this effect with a six month lag.

6.1. Base Case Assumptions

Under our base case for estimating the maximum rollout by alternative entrants over unbundled fibre, we make the following key assumptions:

- Reggefiber rollout:
  - For existing municipalities, we assume that Reggefiber reaches it future rollout estimate in 2033.
  - For new municipalities, we assume Reggefiber enters 15 new municipalities per year and covers all the homes by 2040.
  - The combined result is that Reggefiber's rollout increases from 1.67m at the end of 2013, to 1.98m in 2014, 2.18m in 2015, 2.39m in 2016 and 2.60m in 2017. **[confidential:** XXXXX**]**
- We assume that all new Area-PoPs have a capacity of 3,696 homes per Area-PoP. Not all of these can be reached, and we assume 87% of them are reachable based on the current proportion of all homes passed by Reggefiber that are connected.
- We assume that there are 5 Area-PoPs per City-PoP. The model operates on the basis that once a City-PoP has 5 Area-PoPs connected to it, an additional City-PoP is built.
- For ARPU, **[confidential:** XXXXX**]** we assume the intrinsic ARPU falls by 1% per year. This implies that the price any given bundle for a given broadband speed falls by 1% per year. However, the trend toward higher price bundles and higher speeds means that the overall blended ARPU remains approximately flat over the entire modeling period.
- We assume **[confidential:** XXXXX**]** business customers (which represent 2% of all homes passed) pay an ARPU premium of 10% relative to residential customers and wholesale customers (which represent 10% of all homes passed) pay a discount of 50% relative to residential customers.
- We differentiate between the price discount for each entrant type relative to KPN. Entrant 1 is assumed to be a normal operator offering premium services and charges a discount of

10% relative to KPN . Entrant 2 competes in the budget market with Telfort and charges a discount of 40% relative to KPN.

- We assume a long-run FttH penetration rate of 55% achieved in 2030. **[confidential:** XXXXX**]**
- For market capture, we differentiate between the two entrant types. Entrant 1 already has a small presence in the Netherlands with 2% share, and we assume it will increase its market capture from 8% in 2014 to 20% by 2018. By contrast, entrant 2 has no current footprint and begins with a market capture of 4% in 2014, increasing to 10% by 2018. **[confidential:** XXXXX**]**
- KPN believes that it currently has a churn rate of **[confidential:** XXXXX**]**. Entrants will have a higher churn rate as they cannot rely on customers exhibiting as strong brand loyalty immediately. Therefore, we assume a churn rate of 15% for entrants' **[confidential:** XXXXX**]**.
- We also assume that entrant 2 as a budget operator is likely to offer Analogue-TV, at least to begin with. **[confidential:** XXXXX**]**
- With regards to the business case decision, we assume a cost of capital of [7 – 9 %] **[confidential:** XXXXX**]**.
- On the cost assumptions, we assume the following:
  - 6% of the capex cost of a cost item is opex **[confidential:** XXXXX**]**;
  - The media content costs depend on the type of operator. We use a higher content cost assumption for entrant 1 which provides premium services **[confidential:** XXXXX**]**;
  - Reggefiber's line price charge is expected to stay low in our base case. We note that in reality, there may be some uncertainty around this.

6.2. Base Case Results

Under our base case, we estimate that at the end of 2014, entrant 1 will decide to roll out to 1.6m homes and entrant 2 will decide to roll out to 0.7m homes. By the end of 2017, entrant 1 will decide to roll out to 2.4m and entrant 2 to 1.3m. This represents a 91% and 49% rollout within the Reggefiber network respectively at the end of 2017.

Our results show that there is a positive business case for entry by two entrants, one of which is a premium operator and the other a budget operator. Our ARPU assumptions are sufficient for an entrant to recover costs and make a return on its investment. Therefore under the assumptions we have selected for the base case, we consider entry as likely and profitable; however entry may be more challenging under a different set of condition described in section[7]. We also note that this is an entry decision and not an actual implementation of rollout. Therefore it may take some time before an entrant will actually roll out to the homes.

Table 6.1
NERA Results - Base Case

	Entrant 1				Entrant 2			
	2014	2015	2016	2017	2014	2015	2016	2017
Homes in Netherlands	7,898,886	7,909,944	7,921,018	7,932,107	7,898,886	7,909,944	7,921,018	7,932,107
HP by Reggefiber	1,976,253	2,183,091	2,389,274	2,600,062	1,976,253	2,183,091	2,389,274	2,600,062
% of Netherlands passed by Reggefiber	25%	28%	30%	33%	25%	28%	30%	33%
Number of APs built by Reggefiber	1,219	1,277	1,336	1,387	1,219	1,277	1,336	1,387
Number of CPs built by Reggefiber	472	475	480	484	472	475	480	484
Number of APs passed by Entrant	1,050	1,191	1,267	1,342	290	406	470	527
Number of CPs passed by Entrant	350	397	420	442	68	153	186	210
HA by entrant	41,981	76,143	109,345	144,049	3,605	10,402	18,237	27,548
% of Reggefiber network activated by entrant	2.1%	3.5%	4.6%	5.5%	0.2%	0.5%	0.8%	1.1%
HP by entrant	1,600,774	1,937,767	2,145,749	2,353,308	675,814	945,317	1,110,029	1,272,604
% of Netherlands passed by entrant	20%	24%	27%	30%	9%	12%	14%	16%
% of Reggefiber network passed by entrant	81%	89%	90%	91%	34%	43%	46%	49%
HA by entrant	41,981	76,143	109,345	144,049	3,605	10,402	18,237	27,548
% of HP by entrant activated	2.6%	3.9%	5.1%	6.1%	0.5%	1.1%	1.6%	2.2%

	2014	2015	2016	2017	2014	2015	2016	2017
AP Costs as % of Total Costs	53.25%	86.42%	88.16%	90.63%	40.48%	81.72%	83.44%	85.40%
CP Costs as % of Total Costs	41.58%	13.08%	11.44%	9.07%	37.00%	16.75%	15.38%	13.66%
Network Costs as % of Total Costs	5.17%	0.49%	0.41%	0.31%	22.52%	1.54%	1.18%	0.94%

6.3. WBA Results

Under the scenario of both entrants determining the business case for using WBA, we use the costs associated with providing a service over WBA to determine the likely rollout. We assume that the peak data rate is 1 Mbps,[9] which grows by 33% per year, in line with current forecasts.[10] The forecast growth rate in traffic is very uncertain, so the costs of WBA may grow by far more or less than assumed. Under this scenario, we find that entrant 1, which is a premium operator, rolls out to almost exactly the same number of homes as it does using unbundled fibre. However, entrant 2, which is a budget operator, decides not to roll out to any homes over WBA at all.

Table 6.2
Results - Entry using WBA

	Entrant 1				Entrant 2			
	2014	2015	2016	2017	2014	2015	2016	2017
Homes in Netherlands	7,898,886	7,909,944	7,921,018	7,932,107	7,898,886	7,909,944	7,921,018	7,932,107
HP by Reggefiber	1,976,253	2,183,091	2,389,274	2,600,062	1,976,253	2,183,091	2,389,274	2,600,062
% of Netherlands passed by Reggefiber	25%	28%	30%	33%	25%	28%	30%	33%
Number of APs built by Reggefiber	1,219	1,277	1,336	1,387	1,219	1,277	1,336	1,387
Number of CPs built by Reggefiber	472	475	480	484	472	475	480	484
Number of APs passed by Entrant	1,181	1,288	1,362	1,434	-	-	-	-
Number of CPs passed by Entrant	471	488	508	527	-	-	-	-
HA by entrant	43,649	77,595	111,186	146,177	-	-	-	-
% of Reggefiber network activated by entrant	2.2%	3.6%	4.7%	5.6%	0.0%	0.0%	0.0%	0.0%
HP by entrant	1,664,302	1,976,249	2,183,087	2,389,270	-	-	-	-
% of Netherlands passed by entrant	21%	25%	28%	30%	0%	0%	0%	0%
% of Reggefiber network passed by entrant	84%	91%	91%	92%	0%	0%	0%	0%
HA by entrant	43,649	77,595	111,186	146,177	-	-	-	-
% of HP by entrant activated	2.6%	3.9%	5.1%	6.1%	-	-	-	-

	2014	2015	2016	2017	2014	2015	2016	2017
AP Costs as % of Total Costs	87.34%	95.98%	92.88%	93.03%	0.00%	0.00%	0.00%	0.00%
CP Costs as % of Total Costs	0.00%	0.00%	0.00%	0.00%	0.00%	0.00%	0.00%	0.00%
Network Costs as % of Total Costs	12.66%	4.02%	7.12%	6.97%	0.00%	0.00%	0.00%	0.00%

The critical factor is the ARPU that the two entrants earn. Entrant 2 charges a 40% discount relative to KPN, which is insufficient to recover the cost of providing a service over WBA. Entrant 1 charges only a 10% discount relative to KPN and therefore is able to recover these costs.

However, a 10% discount is likely to be the minimum that an entrant can offer in order to induce customers of KPN to switch. Therefore, if an entrant is forced to charge a higher discount, this will result in lower rollout over WBA compared to over unbundled fibre. An entrant would then prefer to use unbundled fibre. Our interviews with stakeholders also suggested that there are several non-price factors that mean WBA is much less attractive compared to ODF, due to service delivery problems for WBA.

9 **[confidential:** XXXXX]

10 **[confidential:** XXXXX]

In addition, if traffic levels increase more than expected, the costs for providing a service over WBA are likely to increase substantially. We show this below and an increase in the peak data rate in 2014 to 1.5 Mbps and growth rate to 45% results in entrant 1's rollout over WBA falling below the rollout over unbundled fibre to zero. Thus, if downside risks relating to higher traffic levels materialise, an entrant will favour entry over unbundled fibre.

Table 6.3
Results - Entry over WBA with Higher Traffic

	Entrant 1				Entrant 2			
	2014	2015	2016	2017	2014	2015	2016	2017
Homes in Netherlands	7,898,886	7,909,944	7,921,018	7,932,107	7,898,886	7,909,944	7,921,018	7,932,107
HP by Reggefiber	1,976,253	2,183,091	2,389,274	2,600,062	1,976,253	2,183,091	2,389,274	2,600,062
% of Netherlands passed by Reggefiber	25%	28%	30%	33%	25%	28%	30%	33%
Number of APs built by Reggefiber	1,219	1,277	1,336	1,387	1,219	1,277	1,336	1,387
Number of CPs built by Reggefiber	472	475	480	484	472	475	480	484
Number of APs passed by Entrant	-	-	-	-	-	-	-	-
Number of CPs passed by Entrant	-	-	-	-	-	-	-	-
HA by entrant	-	-	-	-	-	-	-	-
% of Reggefiber network activated by entrant	0.0%	0.0%	0.0%	0.0%	0.0%	0.0%	0.0%	0.0%
HP by entrant	-	-	-	-	-	-	-	-
% of Netherlands passed by entrant	0%	0%	0%	0%	0%	0%	0%	0%
% of Reggefiber network passed by entrant	0%	0%	0%	0%	0%	0%	0%	0%
HA by entrant	-	-	-	-	-	-	-	-
% of HP by entrant activated	0.0%	0.0%	0.0%	0.0%	-	-	-	-

	2014	2015	2016	2017	2014	2015	2016	2017
AP Costs as % of Total Costs	0.00%	0.09%	0.06%	0.03%	0.00%	0.00%	0.00%	0.00%
CP Costs as % of Total Costs	0.00%	0.00%	0.00%	0.00%	0.00%	0.00%	0.00%	0.00%
Network Costs as % of Total Costs	100.00%	99.91%	99.94%	99.97%	0.00%	0.00%	0.00%	0.00%

We also test the effect of a higher WBA price on rollout over WBA. By increasing the WBA price by 40% from its current level, we find entry to be unviable for both entrants. Therefore, any increase in KPN's WBA offer may be a deterrent to entry via WBA.

Table 6.4
Results - Entry over WBA with 40% Higher WBA Costs

	Entrant 1				Entrant 2			
	2014	2015	2016	2017	2014	2015	2016	2017
Homes in Netherlands	7,898,886	7,909,944	7,921,018	7,932,107	7,898,886	7,909,944	7,921,018	7,932,107
HP by Reggefiber	1,976,253	2,183,091	2,389,274	2,600,062	1,976,253	2,183,091	2,389,274	2,600,062
% of Netherlands passed by Reggefiber	25%	28%	30%	33%	25%	28%	30%	33%
Number of APs built by Reggefiber	1,219	1,277	1,336	1,387	1,219	1,277	1,336	1,387
Number of CPs built by Reggefiber	472	475	480	484	472	475	480	484
Number of APs passed by Entrant	-	-	-	-	-	-	-	-
Number of CPs passed by Entrant	-	-	-	-	-	-	-	-
HA by entrant	-	-	-	-	-	-	-	-
% of Reggefiber network activated by entrant	0.0%	0.0%	0.0%	0.0%	0.0%	0.0%	0.0%	0.0%
HP by entrant	-	-	-	-	-	-	-	-
% of Netherlands passed by entrant	0%	0%	0%	0%	0%	0%	0%	0%
% of Reggefiber network passed by entrant	0%	0%	0%	0%	0%	0%	0%	0%
HA by entrant	-	-	-	-	-	-	-	-
% of HP by entrant activated	-	0.0%	0.0%	0.0%	-	-	-	-

	2014	2015	2016	2017	2014	2015	2016	2017
AP Costs as % of Total Costs	0.00%	0.00%	0.00%	0.00%	0.00%	0.00%	0.00%	0.00%
CP Costs as % of Total Costs	0.00%	0.00%	0.00%	0.00%	0.00%	0.00%	0.00%	0.00%
Network Costs as % of Total Costs	0.00%	0.00%	0.00%	0.00%	0.00%	0.00%	0.00%	0.00%

7. Model Sensitivities

We test several upside and downside risks on our assumptions to understand what the impact on rollout would be if stakeholders' concerns about certain factors materialise.

7.1. Only 1 Entrant Considers Entry

If entrant 1 is the only operator that considers entry, we find that its business case improves relative to the base case where it is competing with entrant 2 for customers. Entrant 1 does not lose customers to a second entrant, and is able to capture a higher proportion of new customers. This then improves its business case. Therefore if a second entrant does not want to enter for any reason, entrant 1's business case would improve.

Table 7.1
Results - Only 1 Entrant Considers Entry

	Entrant 1				Entrant 2			
	2014	2015	2016	2017	2014	2015	2016	2017
Homes in Netherlands	7,898,886	7,909,944	7,921,018	7,932,107	7,898,886	7,909,944	7,921,018	7,932,107
HP by Reggefiber	1,976,253	2,183,091	2,389,274	2,600,062	1,976,253	2,183,091	2,389,274	2,600,062
% of Netherlands passed by Reggefiber	25%	28%	30%	33%	25%	28%	30%	33%
Number of APs built by Reggefiber	1,219	1,277	1,336	1,387	1,219	1,277	1,336	1,387
Number of CPs built by Reggefiber	472	475	480	484	472	475	480	484
Number of APs passed by Entrant	1,063	1,204	1,284	1,360	-	-	-	-
Number of CPs passed by Entrant	363	410	437	460	-	-	-	-
HA by entrant	50,996	96,125	140,469	186,018	-	-	-	-
% of Reggefiber network activated by entrant	2.6%	4.4%	5.9%	7.2%	0.0%	0.0%	0.0%	0.0%
HP by entrant	1,613,107	1,947,851	2,157,945	2,365,436	-	-	-	-
% of Netherlands passed by entrant	20%	25%	27%	30%	0%	0%	0%	0%
% of Reggefiber network passed by entrant	82%	89%	90%	91%	0%	0%	0%	0%
HA by entrant	50,996	96,125	140,469	186,018	-	-	-	-
% of HP by entrant activated	3.2%	4.9%	6.5%	7.9%	-	-	-	-

	2014	2015	2016	2017	2014	2015	2016	2017
AP Costs as % of Total Costs	59.06%	89.38%	90.55%	88.83%	0.00%	0.00%	0.00%	0.00%
CP Costs as % of Total Costs	36.54%	10.25%	9.14%	6.95%	0.00%	0.00%	0.00%	0.00%
Network Costs as % of Total Costs	4.40%	0.37%	0.31%	4.21%	0.00%	0.00%	0.00%	0.00%

7.2. Reggefiber Rollout Slower than Estimated

We test the impact on rollout if Reggefiber passes fewer homes than expected in each year. Stakeholders expressed a concern that Reggefiber may slow down its rollout if KPN, as its expected majority shareholder, may decide that further rollout may harm KPN's retail position.

We estimate the effect on rollout if Reggefiber reaches its future rollout estimate at each municipality in 2038 rather 2033, five years after the base case. This results in the entrants' business case worsening, but still remaining positive. Although this remains a risk for an entrant, we do not find evidence that the business case would turn negative.

Table 7.2
Results - Reggefiber Rollout Slower than Expected

	Entrant 1				Entrant 2			
	2014	2015	2016	2017	2014	2015	2016	2017
Homes in Netherlands	7,898,886	7,909,944	7,921,018	7,932,107	7,898,886	7,909,944	7,921,018	7,932,107
HP by Reggefiber	1,930,203	2,102,385	2,277,683	2,454,352	1,930,203	2,102,385	2,277,683	2,454,352
% of Netherlands passed by Reggefiber	24%	27%	29%	31%	24%	27%	29%	31%
Number of APs built by Reggefiber	1,205	1,261	1,295	1,347	1,205	1,261	1,295	1,347
Number of CPs built by Reggefiber	472	475	477	481	472	475	477	481
Number of APs passed by Entrant	1,042	1,171	1,224	1,299	262	372	417	471
Number of CPs passed by Entrant	344	394	415	437	59	141	171	191
HA by entrant	41,469	73,764	104,779	136,501	3,339	9,445	16,380	24,313
% of Reggefiber network activated by entrant	2.1%	3.5%	4.6%	5.6%	0.2%	0.4%	0.7%	1.0%
HP by entrant	1,598,450	1,890,180	2,064,356	2,240,723	621,673	853,932	994,184	1,120,768
% of Netherlands passed by entrant	20%	24%	26%	28%	8%	11%	13%	14%
% of Reggefiber network passed by entrant	83%	90%	91%	91%	32%	41%	44%	46%
HA by entrant	41,469	73,764	104,779	136,501	3,339	9,445	16,380	24,313
% of HP by entrant activated	2.6%	3.9%	5.1%	6.1%	0.5%	1.1%	1.6%	2.2%

	2014	2015	2016	2017	2014	2015	2016	2017
AP Costs as % of Total Costs	53.29%	86.04%	87.75%	90.23%	40.06%	81.34%	82.97%	85.06%
CP Costs as % of Total Costs	41.47%	13.45%	11.82%	9.45%	35.33%	16.97%	15.72%	13.90%
Network Costs as % of Total Costs	5.24%	0.51%	0.43%	0.32%	24.60%	1.69%	1.30%	1.04%

7.3. Lower Homes Passed at New Area-PoPs

In our base case, we assume that Reggefiber uses its new model-size for new Area-PoPs, which have a capacity of 3,696 homes. If Reggefiber's new PoP model is not used widely, the PoP capacity will be lower and may decrease the ability of an entrant to earn sufficient revenues at each PoP.

We test the impact of new Area-PoPs having a significantly lower capacity in terms of homes passed. Using an assumption of 1,159 homes per new Area-PoP **[confidential:** XXXXX**]** the rollout for both entrants falls, but rollout for entrant 2 drops much more significantly. This occurs because entrant 2's low ARPU is insufficient to recover the costs at many PoPs if the number of homes passed at those PoPs falls. Therefore, entrant 2 is in a vulnerable position because of its low ARPU, which leaves it at risk of a weaker business case if the PoP capacity falls.

Table 7.3
Results - Lower Homes Passed at New Area-PoPs

	Entrant 1				Entrant 2			
	2014	2015	2016	2017	2014	2015	2016	2017
Homes in Netherlands	7,898,886	7,909,944	7,921,018	7,932,107	7,898,886	7,909,944	7,921,018	7,932,107
HP by Reggefiber	1,976,253	2,183,091	2,389,274	2,600,062	1,976,253	2,183,091	2,389,274	2,600,062
% of Netherlands passed by Reggefiber	25%	28%	30%	33%	25%	28%	30%	33%
Number of APs built by Reggefiber	1,299	1,439	1,591	1,746	1,299	1,439	1,591	1,746
Number of CPs built by Reggefiber	480	496	515	540	480	496	515	540
Number of APs passed by Entrant	1,119	1,393	1,575	1,778	168	225	264	282
Number of CPs passed by Entrant	364	426	461	505	25	76	106	116
HA by entrant	41,779	76,166	109,305	143,969	2,435	6,265	10,236	14,051
% of Reggefiber network activated by entrant	2.1%	3.5%	4.6%	5.5%	0.1%	0.3%	0.4%	0.5%
HP by entrant	1,600,100	1,936,190	2,143,953	2,351,391	440,094	554,986	610,372	639,599
% of Netherlands passed by entrant	20%	24%	27%	30%	6%	7%	8%	8%
% of Reggefiber network passed by entrant	81%	89%	90%	90%	22%	25%	26%	25%
HA by entrant	41,779	76,166	109,305	143,969	2,435	6,265	10,236	14,051
% of HP by entrant activated	2.6%	3.9%	5.1%	6.1%	0.6%	1.1%	1.7%	2.2%

	2014	2015	2016	2017	2014	2015	2016	2017
AP Costs as % of Total Costs	52.92%	86.14%	87.39%	90.03%	38.43%	80.78%	81.91%	80.79%
CP Costs as % of Total Costs	42.04%	13.39%	11.56%	9.68%	25.01%	16.36%	16.03%	14.43%
Network Costs as % of Total Costs	5.04%	0.47%	1.05%	0.29%	36.56%	2.86%	2.06%	4.78%

7.4. Lower ARPU for Entrant 1

In our base case, we assume that entrant 1 charges a 10% discount relative to KPN. This may be significantly lower than what is required to induce a customer to switch from KPN, particularly given KPN customers are thought to have strong brand loyalty.

If we assume that entrant 1 charges a discount of 20% relative to KPN, we find that rollout is lower than if it charges a discount of 10%, but the effect is not significant. In particular, entrant 1 still retains a positive business case, which should not be a barrier to entry.

Table 7.4
Results - Lower ARPU for Entrant 1

	Entrant 1				Entrant 2			
	2014	2015	2016	2017	2014	2015	2016	2017
Homes in Netherlands	7,898,886	7,909,944	7,921,018	7,932,107	7,898,886	7,909,944	7,921,018	7,932,107
HP by Reggefiber	1,976,253	2,183,091	2,389,274	2,600,062	1,976,253	2,183,091	2,389,274	2,600,062
% of Netherlands passed by Reggefiber	25%	28%	30%	33%	25%	28%	30%	33%
Number of APs built by Reggefiber	1,219	1,277	1,336	1,387	1,219	1,277	1,336	1,387
Number of CPs built by Reggefiber	472	475	480	484	472	475	480	484
Number of APs passed by Entrant	1,023	1,172	1,248	1,322	290	406	470	527
Number of CPs passed by Entrant	330	384	408	430	68	153	186	210
HA by entrant	41,411	75,673	108,734	143,301	3,605	10,402	18,237	27,548
% of Reggefiber network activated by entrant	2.1%	3.5%	4.6%	5.5%	0.2%	0.5%	0.8%	1.1%
HP by entrant	1,577,636	1,925,348	2,133,406	2,340,792	675,814	945,317	1,110,029	1,272,604
% of Netherlands passed by entrant	20%	24%	27%	30%	9%	12%	14%	16%
% of Reggefiber network passed by entrant	80%	88%	89%	90%	34%	43%	46%	49%
HA by entrant	41,411	75,673	108,734	143,301	3,605	10,402	18,237	27,548
% of HP by entrant activated	2.6%	3.9%	5.1%	6.1%	0.5%	1.1%	1.6%	2.2%

	2014	2015	2016	2017	2014	2015	2016	2017
AP Costs as % of Total Costs	54.03%	86.69%	88.37%	90.80%	40.48%	81.72%	83.44%	85.40%
CP Costs as % of Total Costs	40.63%	12.81%	11.22%	8.90%	37.00%	16.75%	15.38%	13.66%
Network Costs as % of Total Costs	5.34%	0.50%	0.41%	0.31%	22.52%	1.54%	1.18%	0.94%

7.5. Higher Entrant Churn

Under our base case modeling assumption, we assume that an entrant has an annual churn rate of 15% **[confidential:** XXXXX**]**. However, there is a risk that customers do not exhibit the same brand loyalty that they do with KPN, and are more ready to switch. A customer that switches to an entrant is more likely to be a risk-taker in the first place, and thus is more likely to leave the entrant's service later. Therefore, we estimate the effect on rollout if churn rates are higher than expected.

This results in rollout lower than in the base case, suggesting that the churn rate is a significant factor in the business case decision at many City-PoPs. However, it still does not result in a negative business case over unbundled fibre, and we still find that entrants will have a significant rollout between 2014 and 2017.

The higher entrant churn assumption results in entrant 1's rollout falling much less significantly than entrant 2's. Given KPN is assumed to have the same churn of **[confidential:** XXXXX**]**% in this scenario, entrant 1 and entrant 2's customers are more likely to switch to KPN. However, entrant 1 is more able to maintain rollout because of its higher market capture relative to entrant 2, which allows it to attract more customers than entrant 2. Therefore, entrant 1 is able to defend its overall market share by attracting more customers than entrant 2.

Table 7.5
Results - Higher Entrant Churn

	Entrant 1				Entrant 2			
	2014	2015	2016	2017	2014	2015	2016	2017
Homes in Netherlands	7,898,886	7,909,944	7,921,018	7,932,107	7,898,886	7,909,944	7,921,018	7,932,107
HP by Reggefiber	1,976,253	2,183,091	2,389,274	2,600,062	1,976,253	2,183,091	2,389,274	2,600,062
% of Netherlands passed by Reggefiber	25%	28%	30%	33%	25%	28%	30%	33%
Number of APs built by Reggefiber	1,219	1,277	1,336	1,387	1,219	1,277	1,336	1,387
Number of CPs built by Reggefiber	472	475	480	484	472	475	480	484
Number of APs passed by Entrant	1,032	1,177	1,253	1,327	158	255	305	355
Number of CPs passed by Entrant	336	387	410	432	35	114	141	172
HA by entrant	41,098	73,313	103,368	134,282	2,169	6,905	12,307	18,885
% of Reggefiber network activated by entrant	2.1%	3.4%	4.3%	5.2%	0.1%	0.3%	0.5%	0.7%
HP by entrant	1,584,759	1,928,256	2,135,571	2,343,540	411,137	642,940	775,426	912,506
% of Netherlands passed by entrant	20%	24%	27%	30%	5%	8%	10%	12%
% of Reggefiber network passed by entrant	80%	88%	89%	90%	21%	29%	32%	35%
HA by entrant	41,098	73,313	103,368	134,282	2,169	6,905	12,307	18,885
% of HP by entrant activated	2.6%	3.8%	4.8%	5.7%	0.5%	1.1%	1.6%	2.1%

	2014	2015	2016	2017	2014	2015	2016	2017
AP Costs as % of Total Costs	53.71%	86.35%	87.99%	90.39%	35.65%	80.43%	82.41%	83.77%
CP Costs as % of Total Costs	40.99%	13.15%	11.59%	9.29%	29.28%	17.39%	15.98%	14.99%
Network Costs as % of Total Costs	5.30%	0.51%	0.42%	0.32%	35.07%	2.18%	1.61%	1.24%

7.6. Reggefiber Line Charge Increases to Ceiling

Reggefiber's line charge is currently set below a tariff ceiling. Reggefiber has the freedom to set any price below this ceiling and currently chooses to set a tariff below the ceiling. However, there is a risk that Reggefiber may decide to increase the tariff, which would increase an entrant's costs for entry. We test the effect on the business case if the Reggefiber line charge increases to the ceiling.

The entrant's rollout declines, particularly for entrant 2. This would imply that for entrant 2, the ARPU is only just sufficient at several Area-PoPs to recover costs. If the Reggefiber line charge increases to the ceiling, entrant 2's business case becomes more fragile, because several City-PoPs are no longer commercially viable. Nevertheless the business case remains positive for entry 2, although with a lower level of rollout due to the higher Reggefiber line charge.

Table 7.6
Results - Reggefiber Line Charge Increases to Ceiling

	Entrant 1				Entrant 2			
	2014	2015	2016	2017	2014	2015	2016	2017
Homes in Netherlands	7,898,886	7,909,944	7,921,018	7,932,107	7,898,886	7,909,944	7,921,018	7,932,107
HP by Reggefiber	1,976,253	2,183,091	2,389,274	2,600,062	1,976,253	2,183,091	2,389,274	2,600,062
% of Netherlands passed by Reggefiber	25%	28%	30%	33%	25%	28%	30%	33%
Number of APs built by Reggefiber	1,219	1,277	1,336	1,387	1,219	1,277	1,336	1,387
Number of CPs built by Reggefiber	472	475	480	484	472	475	480	484
Number of APs passed by Entrant	1,041	1,185	1,262	1,335	103	193	247	281
Number of CPs passed by Entrant	342	392	416	437	29	103	136	160
HA by entrant	41,788	75,975	109,167	143,804	1,427	5,426	10,372	15,956
% of Reggefiber network activated by entrant	2.1%	3.5%	4.6%	5.5%	0.1%	0.2%	0.4%	0.6%
HP by entrant	1,593,251	1,933,363	2,142,173	2,349,251	276,484	499,017	635,969	739,018
% of Netherlands passed by entrant	20%	24%	27%	30%	4%	6%	8%	9%
% of Reggefiber network passed by entrant	81%	89%	90%	90%	14%	23%	27%	28%
HA by entrant	41,788	75,975	109,167	143,804	1,427	5,426	10,372	15,956
% of HP by entrant activated	2.6%	3.9%	5.1%	6.1%	0.5%	1.1%	1.6%	2.2%

	2014	2015	2016	2017	2014	2015	2016	2017
AP Costs as % of Total Costs	54.09%	87.10%	88.82%	91.16%	29.67%	79.85%	81.62%	83.21%
CP Costs as % of Total Costs	40.73%	12.43%	10.80%	8.55%	27.61%	17.69%	16.64%	15.42%
Network Costs as % of Total Costs	5.18%	0.47%	0.39%	0.29%	42.73%	2.46%	1.74%	1.37%

Appendix A. ARPU Trends

We assume a trend towards bundled products and services that offer higher speeds. This is summarised below.

Table A.1
Proportion of Customers who Upgrade Bundle

Bundle Change	% of Customers who Upgrade to a Bundled Product in each year
Single-play to Double-play (Call)	0%
Single-play to Double-play (TV)	5%
Single-play to Triple-play	5%
Double-play (Call) to Triple-play	5%
Double-play (TV) to Triple-play	5%

Source: **[confidential:** XXXXX**]**

Table A.2
Proportion of Customers who Upgrade Broadband Download Speed

Broadband Download Speed Change (x Mbps to x Mbps)	% of Customers who Upgrade to Higher Broadband Download Speed in each year	
	Normal Operator	Budget Operator
10 to 50	10%	5%
10 to 100	5%	1%
10 to 500	1%	0%
50 to 100	5%	1%
50 to 500	1%	0%
100 to 500	1%	0%

Source: **[confidential:** XXXXX**]**

Appendix B. Factor Cost Dimensioning

B.1. Reggefiber FTTH costs

Costs, and other conditions applying to input factors supplied by Reggefiber are drawn from the 2014 Reggefiber (RF) tariff book, translated into English as:

Reggefiber Technical Fibre Price Offer.docx

B.1.1. PoP charges

All PoP costs are dimensioned, and enumerated, per PoP, and cost outflow, per year, at each PoP is calculated.

Input Factor	Source	Dimensioning
APoP connection (enablement)	RF	Entry into APoP
		Cost divided between all entrants
APoP colocation (annual)	RF	APoP occupied
		Cost divided between all entrants
CPoP colocation (annual)	RF	CPoP occupied
		Standard charge per entrant

Source: Reggefiber

B.1.2. FTTH line charges

Input Factor	Source	Dimensioning
Line connection (on activation)	RF	Additional homes/businesses 'activated'
Investment fee (on 1st activation)	RF	Per line activated, unless 'churned in' from FTTH pool
Line disconnection (at disconnection)	RF	Homes/businesses lost by entrant
Migration (charged to 'new' operator)	RF	Activations 'churned in' from FTTH pool
FTTH line rental (annual)	RF	Home or business in 'activated' status
Rental maximum (capped)	RF	(Optionally) used in 'price rise sensitivity'
Discount for line rental	RF	7.62%, always applied

Source: Reggefiber

B.1.3. City Ring charges

Input Factor	Source	Dimensioning
City Ring Service	RF	APoP occupied
(AP/CP redundant connection)		Cost divided between all entrants

Source: Reggefiber

B.2. Entrant Equipment costs

[confidential: XXXXX**]**

B.2.1. Equipment at customer homes / businesses

Input Factor	Source	Dimensioning
NTU at activated premises (install)	**[confidential:** XXXXX**]**	Additional homes/businesses 'activated'
Ethernet router/gateway (install)	**[confidential:** XXXXX**]**	Additional homes/businesses 'activated'
Set top box, STB (install)	**[confidential:** XXXXX**]**	Additional homes/businesses 'activated'
Installation at customer premises	**[confidential:** XXXXX**]**	Additional homes/businesses 'activated'
Optical NTU to co-ax adapter (setup)	**[confidential:** XXXXX**]**	Additional analogue TV customers

Source: **[confidential:** XXXXX**]**

B.2.2. Equipment at Area PoPs

Input Factor	Source	Dimensioning
1Gbps port cards at APoP	**[confidential:** XXXXX**]**	Vendor contract, per card, includes chassis 1 port required for each home activated; 48 port capacity per card; 1 card per 48 homes activated Annual opex is calculated as % of capex
Power for equipment	**[confidential:** XXXXX**]**	Charged by Reggefiber Constant estimate per APoP (includes CPoPs)
ODF, including patch panels	**[confidential:** XXXXX**]**	1 position required for each home activated; 48 position capacity per ODF; 1 ODF per 48 homes activated Annual opex is calculated as % of capex
Optical Ampifier for analogue TV	**[confidential:** XXXXX**]**	1 at any APoP with analogue TV at any HA Annual opex is calculated as % of capex
Optical analogue TV splitter	**[confidential:** XXXXX**]**	Capacity for 64 homes with analogue TV 1 splitter per 64 homes activated, with ATV Annual opex is calculated as % of capex

Source: **[confidential:** XXXXX**]**

B.2.3. Equipment at City PoPs

Input Factor	Source	Dimensioning
CPoP 10G switch, including 16 x 1G ports	**[confidential:** XXXXX**]**	Attached AP use redundant 1G connections Each AP uses 2 x 1G CPoP switch ports 16 port capacity can connect 8 APs on ring 1 CPoP switch employed for 8 APs on ring Annual opex is calculated as % of capex
CPoP ODF	**[confidential:** XXXXX**]**	1 position required for each AP connection; 48 position capacity per ODF; 1 ODF per 48 AP connections Annual opex is calculated as % of capex
CPoP DWDM for backhaul	**[confidential:** XXXXX**]**	One DWDM equipment at each CPoP With a matching unit at an aggregation site 2 units per CPoP Annual opex is calculated as % of capex

Source: **[confidential:** XXXXX**]**

B.2.4. Equipment at Aggregation sites

No equipment at aggregation sites is modelled. The DWDM equipment that will be sited at Aggregation sites is automatically calculated as part of the CPoP equipment requirements.

B.2.5. Equipment within main Network

Input Factor	Source	Dimensioning
Switch s/w, management, provisioning	**[confidential:** XXXXX**]**	Capacity to manage 550 switches 1 provisioned for each 550 APoPs (inc CP/AP) Annual opex is calculated as % of capex
DWDM increment in core network	**[confidential:** XXXXX**]**	Incremental to existing DWDM network Estimate of fixed incremental cost for FTTH Annual opex is calculated as % of capex
IP TV platform, streamers and storage	**[confidential:** XXXXX**]**	Provisioned at Network Centre Capacity for 150,000 IPTV users Only consumers assumed to take TV 1 provisioned for every 150,000 consumers, Totalled over whole FTTH (or WBA) service Annual opex is calculated as % of capex
Analogue Network Head End	**[confidential:** XXXXX**]**	Only provisioned if any analogue TV HA 1 provisioned at network centre Annual opex is calculated as % of capex
Customer support equipment	**[confidential:** XXXXX**]**	Provisioned at Network Centre Capacity for 148,544 users 1 provisioned for every 148,544 consumers, Totalled over whole FTTH (or WBA) service Annual opex is calculated as % of capex

Source: **[confidential:** XXXXX**]**

B.3. Entrant transmission services

B.3.1. Backhaul

Input Factor	Source	Dimensioning
CPoP – Aggregation backhaul	**[confidential:** XXXXX**]**	**[confidential:** XXXXX**]** charge per CPoP, capex Opex E100 per year

Source: **[confidential:** XXXXX**]**

B.4. Entrant content/media costs

B.4.1. TV Licences

Input Factor	Source	Dimensioning
Budget operator content, VA, VOIP	**[confidential:** XXXXX**]**	Per consumer
Premium content	**[confidential:** XXXXX**]**	Per consumer

Source: **[confidential:** XXXXX**]**

B.4.2. VOIP services

Input Factor	Source	Dimensioning
Premium VOIP	**[confidential:** XXXXX**]**	Per consumer

Source: **[confidential:** XXXXX**]**

B.5. General costs

B.5.1. Subscriber management and support

Input Factor	Source	Dimensioning
Subscriber acquisition cost	**[confidential:** XXXXX**]**	Subscribers added each year
Consumer SG&A (annual)	**[confidential:**	Per consumer

	XXXXX**]**	
Business SG&A (annual)	**[confidential:** XXXXX**]**	Per business customer

Source: **[confidential:** XXXXX**]**

B.5.2. Network support

Input Factor	Source	Dimensioning
Network support consumer (annual)	**[confidential:** XXXXX**]**	Per consumer
Network support business (annual)	**[confidential:** XXXXX**]**	Per business customer
Network support wholesale (annual)	**[confidential:** XXXXX**]**	Per wholesale customer

Source: **[confidential:** XXXXX**]**

B.6. Wholesale Broadband Access WBA

WBA prices were taken from KPN publication:

KPN WBA Reference Offer.pdf

B.6.1. FTTH lines

Input Factor	Source	Dimensioning
New FTTH line (activation)	KPN	Additional homes/businesses ‘activated’
FTTH line migration (activation)	KPN	Activations ‘churned in’ from FTTH pool
FTTH line charge (annual)	KPN	Home or business in ‘activated’ status

Source: KPN

B.6.2. Capacity on FTTH lines

Input Factor	Source	Dimensioning
100/100 Mbps VLAN (annual)	KPN	Home or business in ‘activated’ status

Source: KPN

B.6.3. Bitstream transport to National interconnect

Input Factor	Source	Dimensioning

VLAN transport instances (setup)	KPN	Zero. Best effort, and VOIP VLANs included in WAP service
VLAN transport instances (annual, > 6)	KPN	Zero. Best effort, and VOIP VLANs included in WAP service
VLAN transport, Metroarea to WAP (1Gbps)	KPN	1 Mbps peak, per HA **[confidential:** XXXXX**]** base data, computed as 0.001 Gbps per home/business, and summed over whole FTTY footprint of entrant, gives total Gbps transport requirement, Nationally, and is also the number of 1Gbps VLAN transport capacities required.

Source: KPN

B.6.4. National interconnect

Input Factor	Source	Dimensioning
WBA implementation costs (setup)	KPN	Per network (i.e., ‘1’)
WAP 10Gbps	KPN	1 Mbps peak, per HA **[confidential:** XXXXX**]** base data, computed as 0.001 Gbps per home/business, and summed over whole FTTY footprint of entrant, gives total Gbps transport requirement, Nationally. Using this figure, the number of WAPs required, of 10Gbps capacity each, is calculated.

Source: KPN

Appendix C. Model Guide

NERA's model is split into the following six files:

- Dashboard V1a.xlsm
- FttH Rollout Market Entry Model V1x.xlsb
- Demand_Link V1d.xlsx
- DriversV4a_Ent1.xlsb
- DriversV4a_Ent2.xlsb
- Costs_Link.xlsx
- FttH Rollout Market Entry Financials V1l.xlsb

All the files must be saved *in the same folder* and under *the same file names* as above for the model to run.

C.1. How to Run Model

In order to run the model and produce results for any chosen set of assumptions, please perform the following steps. We recommend that all the files and applications are closed during a model run.

1. If your version of Microsoft Excel is set in a macro-disabled state, please 'Enable Content' after Microsoft Excel.
2. Open the file "Dashboard V1a.xlsm". Go to the 'Dashboard' sheet.
3. Select preferred assumptions.
4. Click on the button labelled '1. Run Demand Output'.
5. Once processes are complete and no other files are open, click on the button labelled 'Cost Computation – Entrant 1'.
6. Once processes are complete and no other files are open, click on the button labelled 'Cost Computation – Entrant 2'.
7. Once processes are complete and no other files are open, click on the button labelled 'Run Business Case'.
   A. When prompted "Do you want to replace the content of the destination cells", click "Yes".
   B. When prompted "Do you want to save the changes you made to 'Costs_Link.xlsx', click "Save".
8. Once processes are complete and no other files are open, go to the 'Results' tab in the 'Dashboard V1a.xlsm' file. The results are displayed in the table under the heading Results – Live from Current Model Run.

C.2. Model File Guide

In this appendix, we describe the contents of each file and provide a brief summary of each sheet.

C.2.1. Dashboard V1a.xlsm

This file contains the input assumptions for the model. All cells in yellow contain parameters that may be changed within the model. The Dashboard sheet contains a list of the assumptions divided into categories.

The first section relates to Demographic data. Of particular interest in this section is the year in which future rollout targets are achieved. If the year 2033 is selected, this results in rollout of around 250,000 homes per year under the base case. In addition, the ratio of homes passed per Area-PoP (Theoretical Capacity at New Area-PoPs), the proportion of Area-PoP capacity that is feasible and the ratio of Area-PoPs to City-PoPs may be parameters that a user may want to change.

The table at the bottom shows the municipalities in which another firm is rolling out an FttH network. The table shows the proportion of these municipalities that each of these firms has currently passed.

The second section relates to the market data assumptions, including on ARPU, FttH penetration rate, market churn and market capture. We model the ARPU and market capture under two scenarios for the second entrant, one where it is 'budget' entrant and the other where it is a 'normal' entrant. Under the former scenario, the second entrant charges a lower price and is able to capture a smaller share of the market relative to the latter scenario.

The third section relates to how the business case is determined by an entrant. The model can be run on the basis of assessing City-PoPs as a whole or by assessing Area-PoPs individually. The model can be run for two entrants or one. In addition, the model contains a cost of capital assumption for each year of the forecasting period.

The file also contains two results sheets, the first of which contains the live results from the most recent run and the base case. The other results sheet contains the results for various sensitivity scenarios.

C.2.2. FttH Rollout Market Entry Model V1x.xlsb

This file contains the demographic and demand analysis. The outputs from this file are used to derive revenues and costs. We describe each of the sheets briefly below:

- Dashboard: This is a link sheet from the Dashboard V1a.xlsm file
- MktData: The market data shown here includes background information on broadband speeds, market concentration and market churns. **[confidential:** XXXXX**]**
- CBS: This sheet contains data from the CBS in the Netherlands on the number of households per municipality.

- PoPs: Reggefiber's data on the number of homes passed and future rollout estimates at the Area-PoP level are shown in this sheet. The data is used to derive expected future rollout at existing municipalities.
- Ex Mun: Reggefiber's data on homes passed and future rollout at the municipality level is shown on this sheet.
- New Mun: This sheet displays our analysis of new municipalities including the order in which Reggefiber would expect to pass them, based on population density and the eventual rollout, based on the total number of households in these municipalities.
- ARPU: This sheet contains our estimate of the blended ARPU. It is calculated from the ARPU for individual services and the proportion of customers taking a service. We also assume a gradual trend towards bundled products and broadband packages with higher speeds. We calculate the business and wholesale ARPU as a premium/discount relative to the residential ARPU.
- MktDemand: We estimate the market capture of new and churning customers for each entrant in this sheet based on Dashboard assumptions.
- Demographics: In this sheet we analyse the future rollout by Reggefiber at both existing and new municipalities. We also calculate the number of Area-PoPs required for this expected rollout.
- Pivot: This sheet is a computational sheet to display all the expected Area-PoPs on a row-by-row basis. The sheet shows the number of homes passed by Reggefiber as well as homes activated by all operators and by KPN.
- DemandEnt1: This is an output sheet that shows the homes activated, homes lost, residential homes activated and other demand information for entrant 1. These are derived from all the previous sheets in the file.
- DemandEnt2: This is an output sheet that shows the homes activated, homes lost, residential homes activated and other demand information for entrant 2. These are derived from all the previous sheets in the file.

C.2.3. Demand_Link V1d.xlsx

This file is link file between the FttH Rollout Market Entry Model V1x.xlsb file, the FttH Rollout Market Entry Financials V1.xlsb and Drivers V4A files. The data is hard-pasted, so information in this email should not be interpreted directly.

C.2.4. DriversV4a_Ent1.xlsb and DriversV4a_Ent2.xlsb

These files dimension assets and compute costs for each entrant separately. Both files are inherently the same, but there are differences in demand inputs based on the entrant being modelled. Each of the sheets is described below:

- Drivers: This sheet computes the volumes of each driver that affects the volumes for each asset required. It is based on a set of dimensioning rules for different types of driver.
- Factor Costs: This sheet contains data for each cost item listed by row and shows their cost, how often it is incurred, and other relevant information.
- Asset Volumes: This sheet is used for the macro that computes cost for each cost item.

- CostCalc: This sheet is used to calculate the financial cost incurred for any single cost item.
- Asset Names: This sheet is used for the cost computation macro and should not be changed.
- Cost Output: This sheet produces the output for the costs for each Area-PoP in each year. The costs are separated by Area-PoP related costs, City-PoP related costs and network-related costs.

C.2.5. FttH Rollout Market Entry Financials V1l.xlsb

This file calculates the final results for rollout by one or both entrants. The file uses inputs from Demand_Link V1d and CostsLink.xlsm. The sheets are briefly described below:

- ARPU: This is a link from the Market Entry Model, used to calculate revenues.
- RF Rollout: This is the expected Reggefiber rollout for future years.
- DemandEnt1: This contains the homes activated, homes lost and other demand information for entrant 1 and is used to derive its revenues.
- DemandEnt2: This contains the homes activated, homes lost and other demand information for entrant 2 and is used to derive its revenues.
- Revenue: The revenue for each entrant is calculates using the ARPU and demand information.
- Costs: This sheet displays the cost for both entrants at the Area-PoP, City-PoP and networks levels separately.
- CashFlow: This sheet estimates the cash flows for each Area PoP in each year. The cash flows are calculated separately based on whether the Area-PoP level business case assessment is used or the City-PoP level business case assessment is used.
- Business Case: The mode calculates the internal rate of return in this sheet using the cash-flows and determines entry on this basis.
- Results: This sheet reports the results on rollout and other information on Reggefiber'

Report qualifications/assumptions and limiting conditions

This report is for the exclusive use of the NERA Economic Consulting client named herein. There are no third party beneficiaries with respect to this report, and NERA Economic Consulting does not accept any liability to any third party.

Information furnished by others, upon which portions of this report are based, is believed to be reliable but has not been independently verified, unless otherwise expressly indicated. Public information and industry and statistical data are from sources we deem to be reliable; however, we make no representation as to the accuracy or completeness of such information. The findings contained in this report may contain predictions based on current data and historical trends. Any such predictions are subject to inherent risks and uncertainties. NERA Economic Consulting accepts no responsibility for actual results or future events.

The opinions expressed in this report are valid only for the purpose stated herein and as of the date of this report. No obligation is assumed to revise this report to reflect changes, events or conditions, which occur subsequent to the date hereof.

All decisions in connection with the implementation or use of advice or recommendations contained in this report are the sole responsibility of the client. This report does not represent investment advice nor does it provide an opinion regarding the fairness of any transaction to any and all parties.

NERA
ECONOMIC CONSULTING

NERA Economic Consulting
15 Stratford Place
London W1C 1BE
United Kingdom
Tel: 44 20 7659 8500 Fax: 44 20 7659 8501
www.nera.com